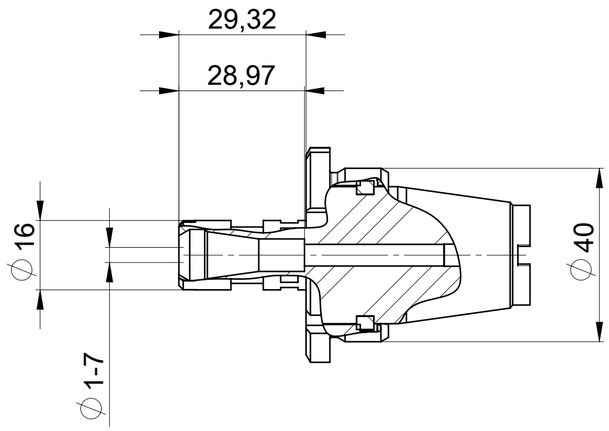

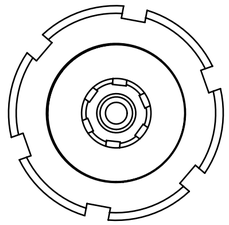

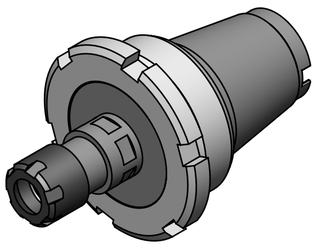

Commercial Code: UC ER32I-ER11EL		
Denomination: Driven tool accessory-Uni Change		Item Code: UC-ER32I-ER11EL
Speed Max (out) rpm	Coolant	Weight 0.357Kg
Transmission Ratio n1:n2	T2. Max Nm	Info: ALGRA S.p.A. Via Manzoni 41, I-24031 Almenno S.Salvatore (BG) Tel. +39 035642051 Fax +39 035640128 algra.accessori@algra.it
Pressure Max bar	Filtration µm	
InPut ER-32 Internal	Output ER 11	

QUESTO DISEGNO E TUTTE LE INFORMAZIONI CONTENUTE SONO DI NOSTRA PROPRIETA'. NON PUO' ESSERE DIVULGATO O COPIATO SENZA NOSTRA AUTORIZZAZIONE SCRITTA E DEVE ESSERE RESO SE RICHIESTO
THIS DRAWING AND ALL INFORMATION THEREON IS OUR PROPERTY AND MAY BE CONFIDENTAL. IT MUST NOT BE MADE PUBLIC OR COPIED UNLESS AUTHORIZED BY US AND IS SUBJECT TO RETURN UPON REQUEST
DIESE ZEICHNUNG IST UNSER EIGENTUM UND DARF OHNE UNSERE GENEHMIGUNG WEDER VERVIELFÄLTIGT NOCH DRITTEN PERSONEN, INSBESONDERE KONKURRENZFIRMEN AUSGEHÄNDIGT ODER MITGETEILT WERDEN

A2